WWW.CHINA-GAUGES.COM
info@iec-equipment.com

Short Test Pin of IEC61032

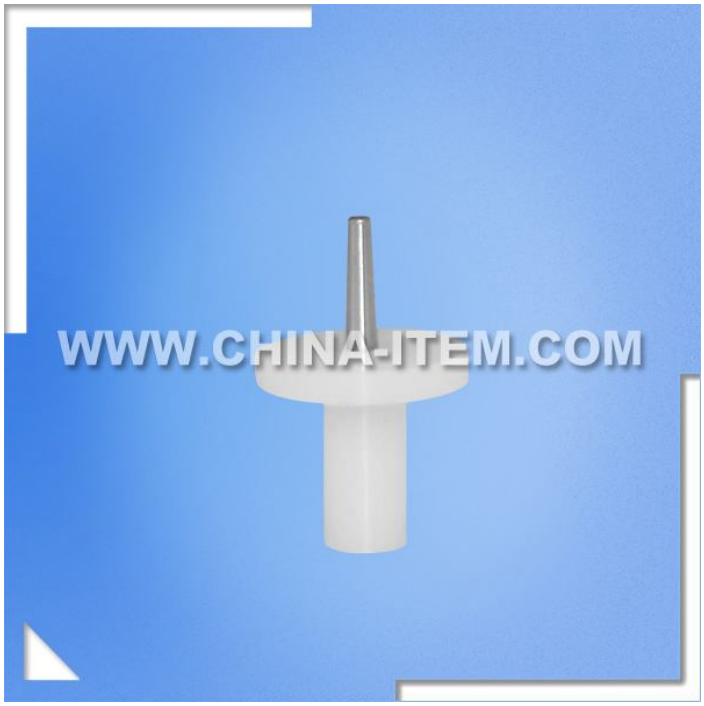

Meets IEC CSA & UL requirements Test Probe 13 of Short Test Pin - Fig. 9 of EN 61032

IEC 61032 Test Probe 13 meets IEC CSA & UL requirements

This pin probe is intended to verify the protection against access to hazardous live parts in class 0 equipment and class II equipment (see IEC60536).

Conforms to:
Standard IEC61032-1997, IEC60529-2001, GB/T4208-2008 and UL etc.

The **Short Test Pin (Figure 9 - Test probe 13) of IEC 61032** is intended to verify the protection against access to hazardous live parts in class 0 equipment and class II equipment (**IEC 60536**).

Devices Specifications	
Material:	**Stainless Steel**.
Finish:	**Polished.**
According to:	**Figure 9 (Test Probe 13) of IEC 61032**.

WWW.CHINA-GAUGES.COM
info@iec-equipment.com

c)

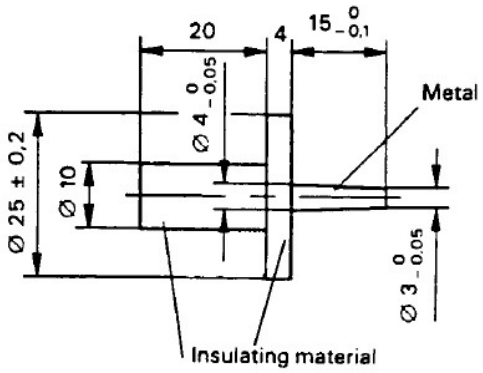

Dimensions in millimetres

This pin is intended to verify the protection against access to hazardous live parts in class 0 equipment and class II equipment (see IEC 60536).

Figure 9 – Test probe 13